EX231Wp OUTLINE DRAWING

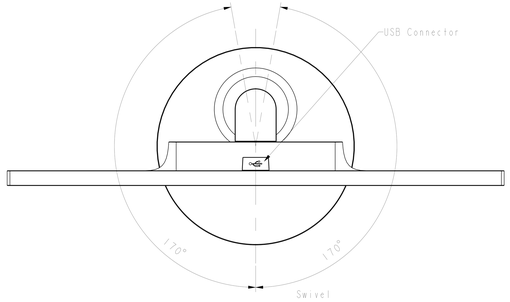

Cabinet Color
- White Model
  - Front Bezel:Whitish Gray
  - Rear Cover:Whitish Gray
  - Stand Unit:AL Silver and Whitish Gray
- Black Model
  - Front Bezel:Pure Black
  - Rear Cover:Pure Black
  - Stand Unit:Pure Black

Stand Function
- Tilt Angle
  - Up 30°
  - Down -5°
- Swivel Angle
  - Left 170°
  - Right 170°
- Pivot Angle
  - Clockwise 90°
- Height Adjust
  - 110mm
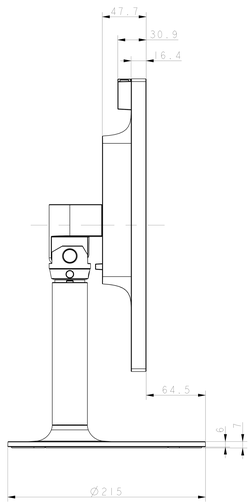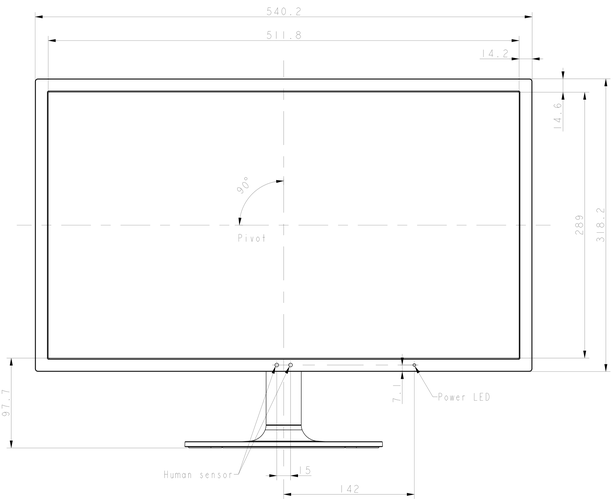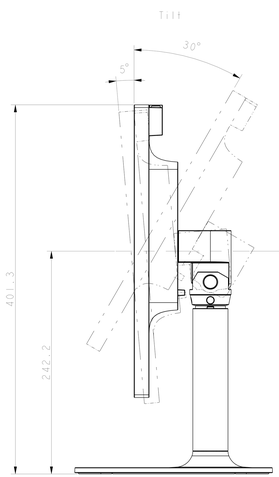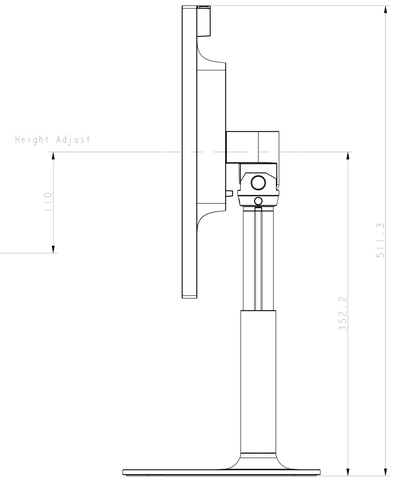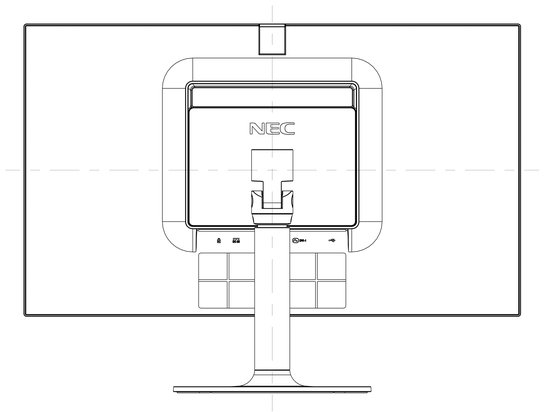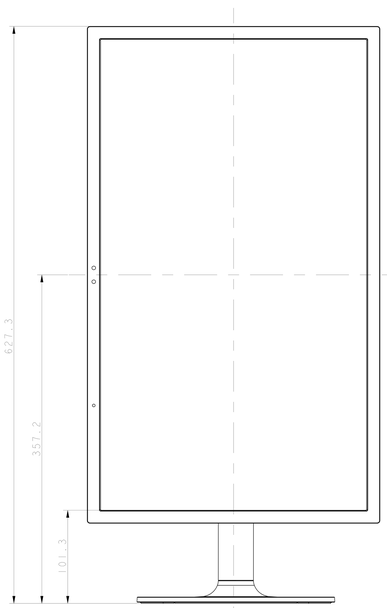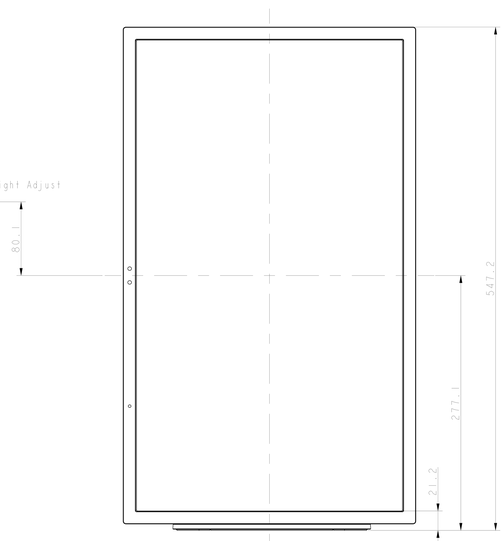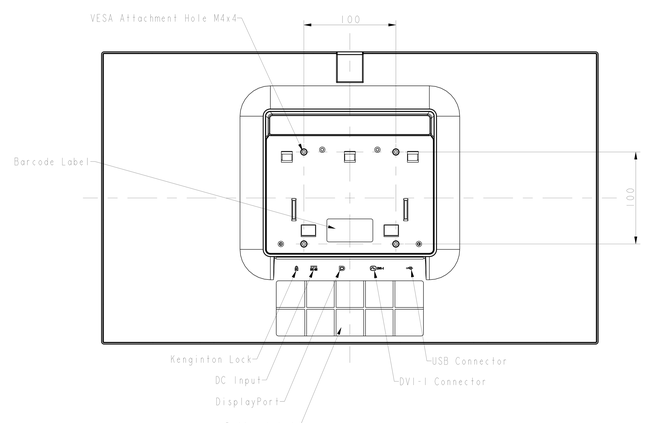
Weight
- With stand:4.1kg
- Without stand:2.8kg